COTENTS

TITLE **PAGE**

CONTENTS ····· page 1 of 8
RECORD OF REVISIONS ····· page 1 of 8
FUNCTION LAYOUT ····· page 2 of 8
FEATURES ····· page 3 of 8
INTERFACE DEFINITION ····· page 4 of 8
CONTROLLER DIMENSIONS ····· page 6 of 8
KEY & IR BOARD SYSTEM SCHEMATIC ····· page 8 of 8
OPERATION REQUIREMENT ····· page 8 of 8

RECORD OF REVISIONS

REVISION NO.	DATE	PAGE	DESCRIPTION

1. GENERAL DESCRIPTION

TSU26 V8.0 is a multi-purpose LCD controller, it is suitable Asia market. It is designed to support dual/single LVDS of 14-32 inch LCD panel.

TSU26 V8.0 can support AV,BNC,PC-RGB,S-Video,YPBPR signal input.

2. FUNCTION LAYOUT

The following all pictures are a reference only. Please take the actual objects as a standard.

BNC BOARD

Elevation of TSU26 V8.0

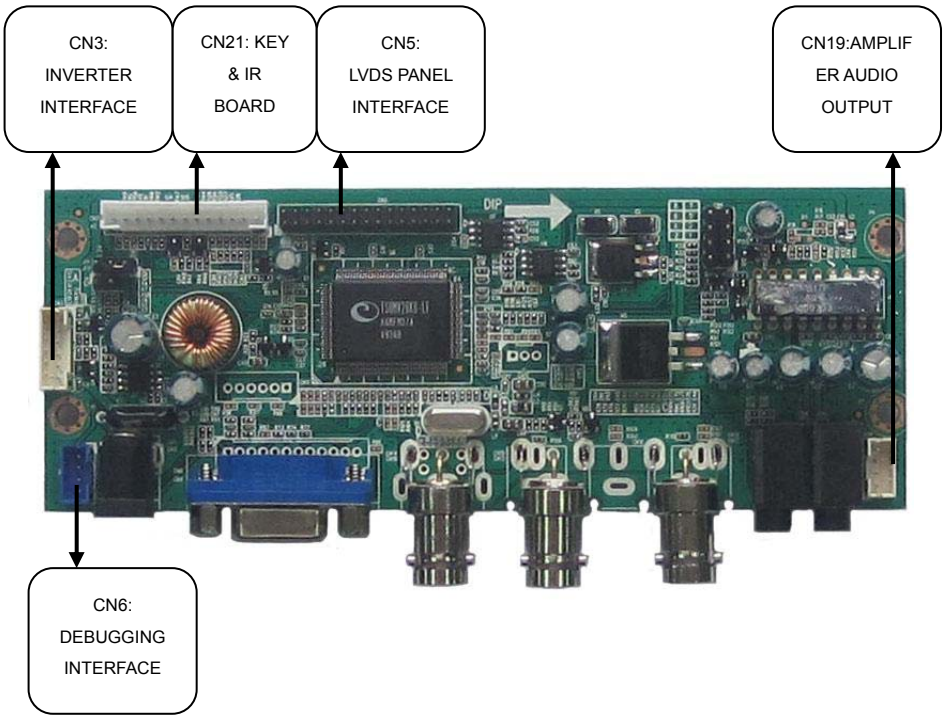

Side Elevation of TSU26 V8.0

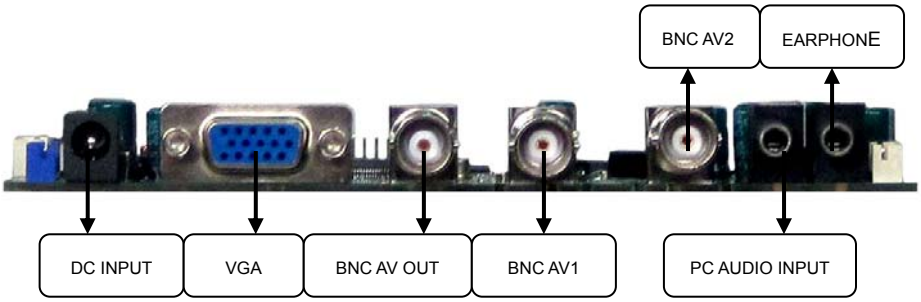

RCA BOARD

Elevation of TSU26 V8.0

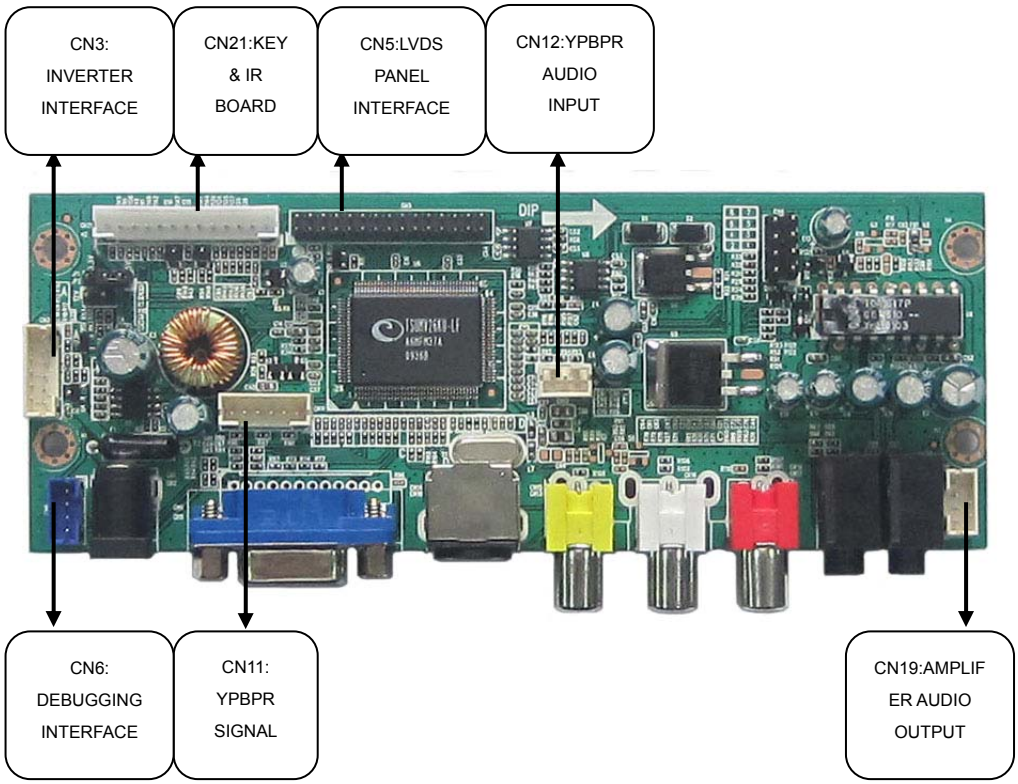

Side Elevation of TSU26 V8.0

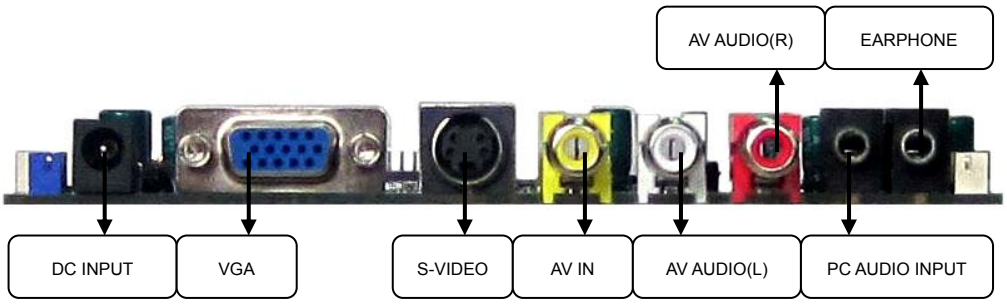

3. FEATURES

Below you will find the detailed feature

CHIPSET	TSU26	
MARKET AREA	Asia	
OSD LANGUAGE	English, Chinese	
VIDEO INPUT	S-Video	S-Y:1.0V Vp-p +/-5% S-C:0.3 Vp-p +/-5%
	CVBS	1.0Vp-p +/-5%
	YPbPr / YCbCr	480i、480p、576i、576p、720p、1080i、1080p

	PC-RGB	Format	Up to 1920*1080@60HZ
		Color	16bit, 24bit, 32bit
POWER	Power Requirement	12V	
	Adaptor	12V	
	To panel	3.3V,5V,12V	
	Manage	Low power consumable mode: standby≤3w	
AUDIO INPUT	S-Video/CVBS	Left and right audio input	
	PC-RGB and YUV	Pc: Earphone input	
PANEL RESOLUTIONS	Up to 1920*1080@60HZ		
KEY FUNCTIONS	CH-,CH+,MENU,VOL-,VOL+,SOURCE ,ON/OFF		
AUDIO OUTPUT	2*2w@ 8Ω		
COMB FILTER	2D		
DE-INTERLACE	2D		
TERMINAL	Input	PC-RGB Input	1D-SUB 15PIN terminal blue color
		S-Video Input	1S-Video terminal black color
		CVBS Input	1RCA terminal yellow color
		YPbPr Input	1 terminal black color
		CVBS Audio Input	2RCA terminal white color, red color
		YPbPr Audio Input	
		PC-RGB Audio Input	1 earphone terminal black color
	Output	To Panel	Double LVDS 30PIN/2.0 jack

4. INTERFACE DEFINITION

CN3 (6PIN/2.0) INVERTER INTERFACE

NO.	SYMBOL	DESCRIPTION	ELECTRIC CHARACTER
1	GND	Ground	---
2	GND		
3	ADJUST	Brightness adjustment	0-5V adjustable
4	BKLTON	Black-light ON/OFF control	5V ，1K ohm output impedance
5	12VA	+12V DC Power supply	INVERTER Power Supply
6	12VA	+12V DC Power supply	INVERTER Power Supply

CN5 (2*15PIN/2.0) LVDS PANEL INTERFACE

NO.	SYMBOL	DESCRIPTION
1	LCDPWR	Power for panel
2	CT	mode pin for panel

3	LCDPWR	Power for panel
4	GND	Ground
5	GND	
6	GND	
7	RXO0-	LVDS ODD 0- Signal
8	RXO0+	LVDS ODD 0+ Signal
9	RXO1-	LVDS ODD 1- Signal
10	RXO1+	LVDS ODD 1+ Signal
11	RXO2-	LVDS ODD 2- Signal
12	RXO2+	LVDS ODD 2+ Signal
13	GND	Ground
14	GND	
15	RXOC-	LVDS ODD Clock- Signal
16	RXOC+	LVDS ODD Clock+ Signal
17	RXO3-	LVDS ODD 3- Signal
18	RXO3+	LVDS ODD 3+ Signal
19	RXE0-	LVDS EVEN 0- Signal
20	RXE0+	LVDS EVEN 0+ Signal
21	RXE1-	LVDS EVEN 1- Signal
22	RXE1+	LVDS EVEN 1+ Signal
23	RXE2-	LVDS EVEN 2- Signal
24	RXE2+	LVDS EVEN 2-+ Signal
25	GND	Ground
26	GND	
27	RXEC-	LVDS EVEN Clock- Signal
28	RXEC+	LVDS EVEN Clock+ Signal
29	RXE3-	LVDS EVEN 3- Signal
30	RXE3+	LVDS EVEN 3+ Signal

CN6 (4PIN/2.0) DEBUGGING INTERFACE

NO.	SYMBOL	DESCRIPTION
1	GND	Ground
2	TXD	Transmit data
3	RXD	Receive data
4	5V	+5V DC Power supply

CN11 (6PIN/2.0) YPBPR SIGNAL

NO.	SYMBOL	DESCRIPTION
1	GND	Ground
2	Y	Y signal

3	GND	Ground
4	PB	PB signal
5	GND	Ground
6	PR	PR signal

CN12 (3PIN/2.0) YPBPR AUDIO INPUT

NO.	SYMBOL	DESCRIPTION
1	Y_RIN	Audio right input
2	GND	Ground
3	Y_LIN	Audio left input

CN19 (4PIN/2.0) AMPLIFER AUDIO OUTPUT

NO.	SYMBOL	DESCRIPTION
1	TDA_R	Audio output right for sound box
2	GND	Ground
3	GND	Ground
4	TDA_L	Audio output left for sound box

CN21 (9PIN/2.0) KEY & IR BOARD

NO.	SYMBOL	DESCRIPTION
1	CH-	CH- key
2	CH+	CH+ Key
3	MENU	MENU Key
4	AUDIO/PC-AV	PC-AV in
5	VOL-	VOL- Key
6	VOL+	VOL+ Key
7	GND	Ground
8	GREEN	Green indicator
9	RED	Red indicator
10	ON/OFF	ON/OFF key
11	GND	Ground
12	IR_IN	IR in
13	IR_VCC	+5V DC power supply

5. CONTROLLER DIMENSIONS

The dimension is identical to the actual objects.But maybe exist the slight error of measures about 1%.It is allowed in design.

BNC BOARD

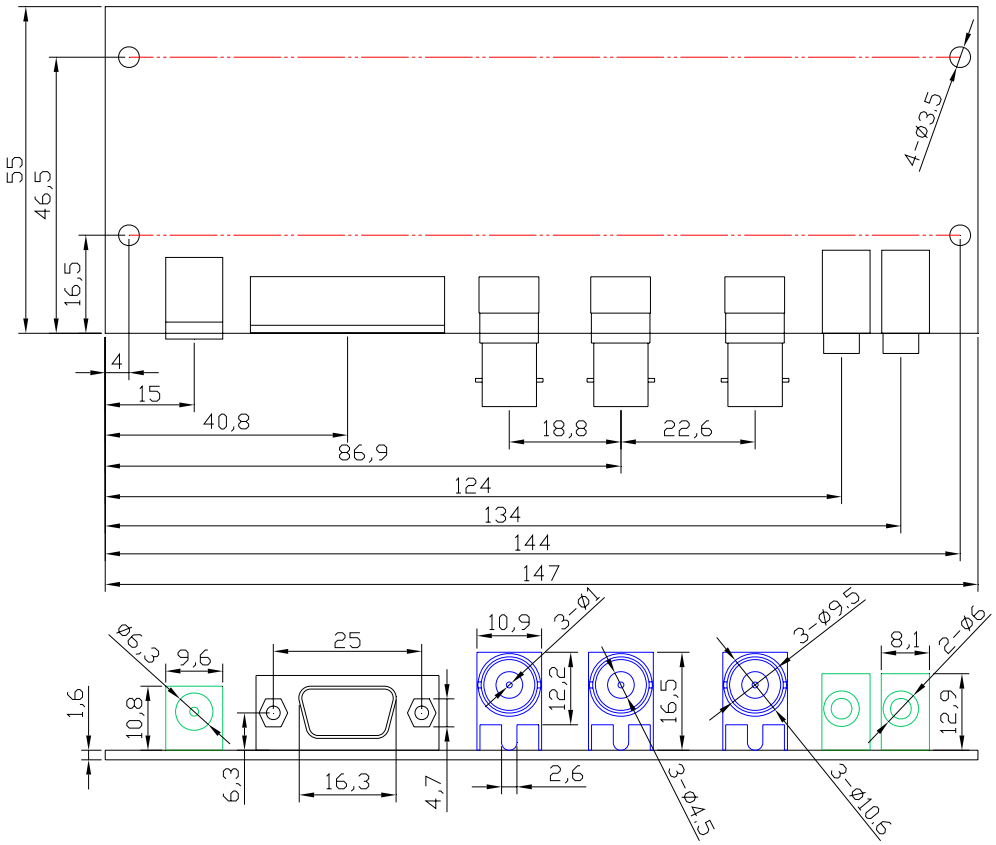

RCA BOARD

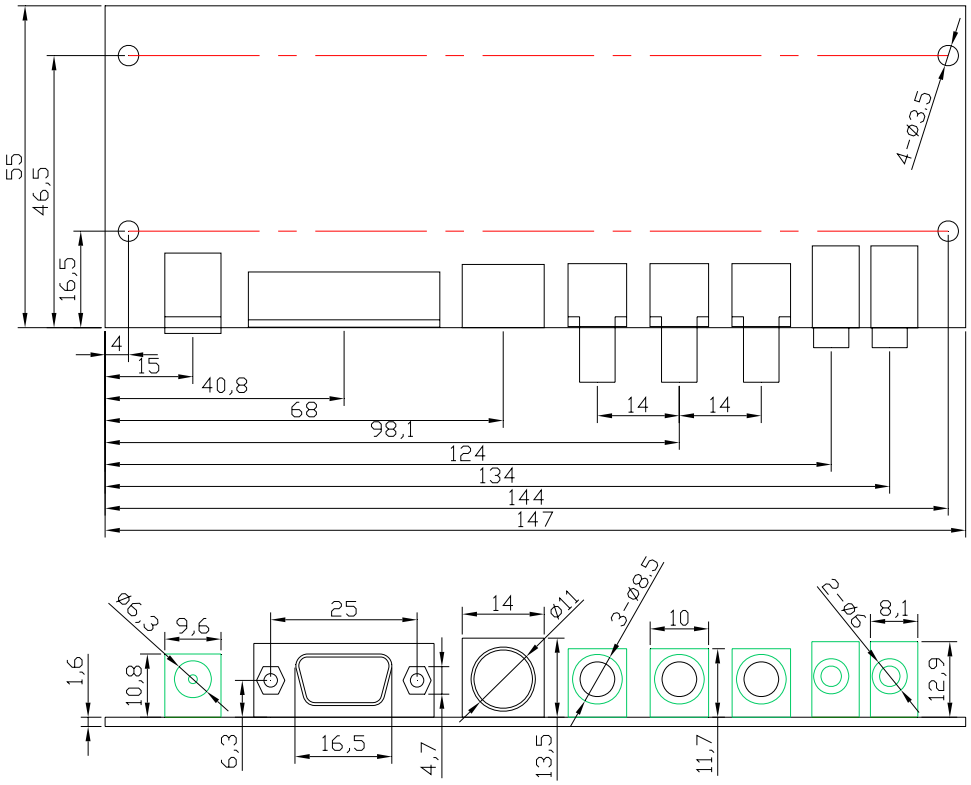

6. KEY BOARD & IR BOARD SYSTEM SCHEMATIC

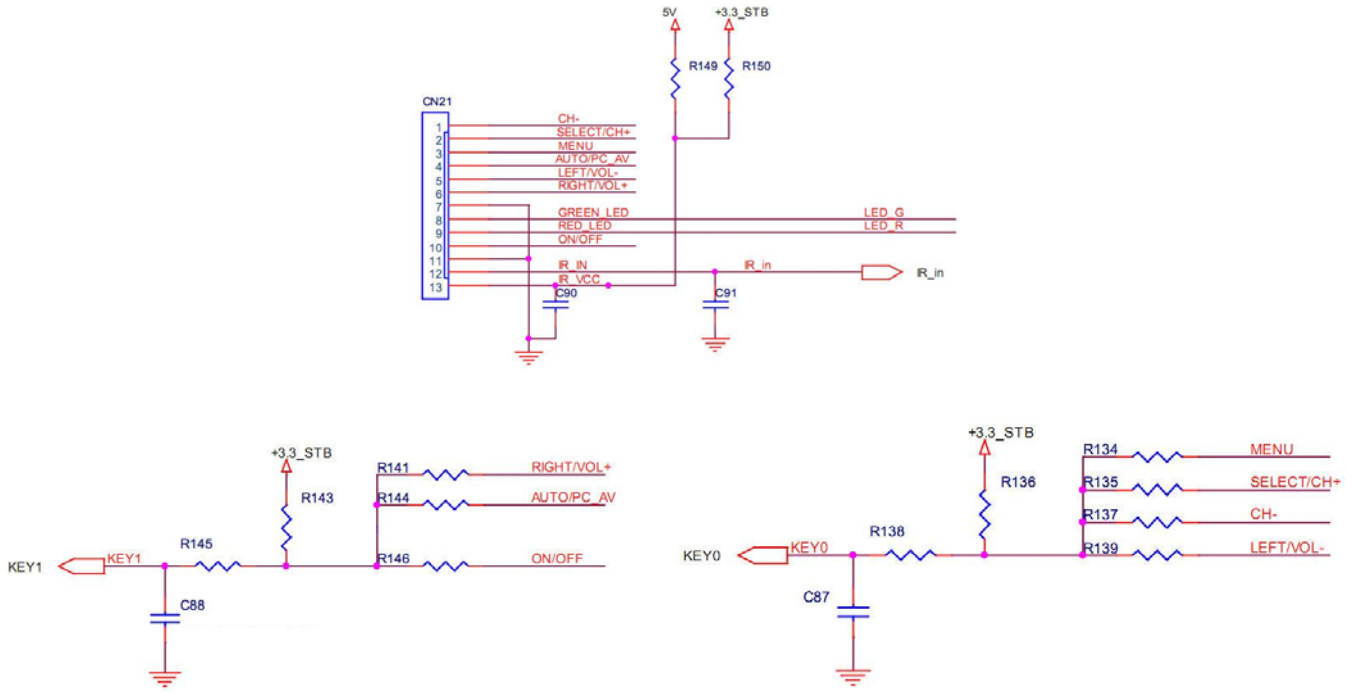

7. OPERTION REQUIREMENT

- **Do not pressed and distorted.**
- **Keep away from static and water.**
- **Relative humidity :≤80%**
- **Storage temperature:-10~+60℃**
- **Operation temperature:0~+40℃**